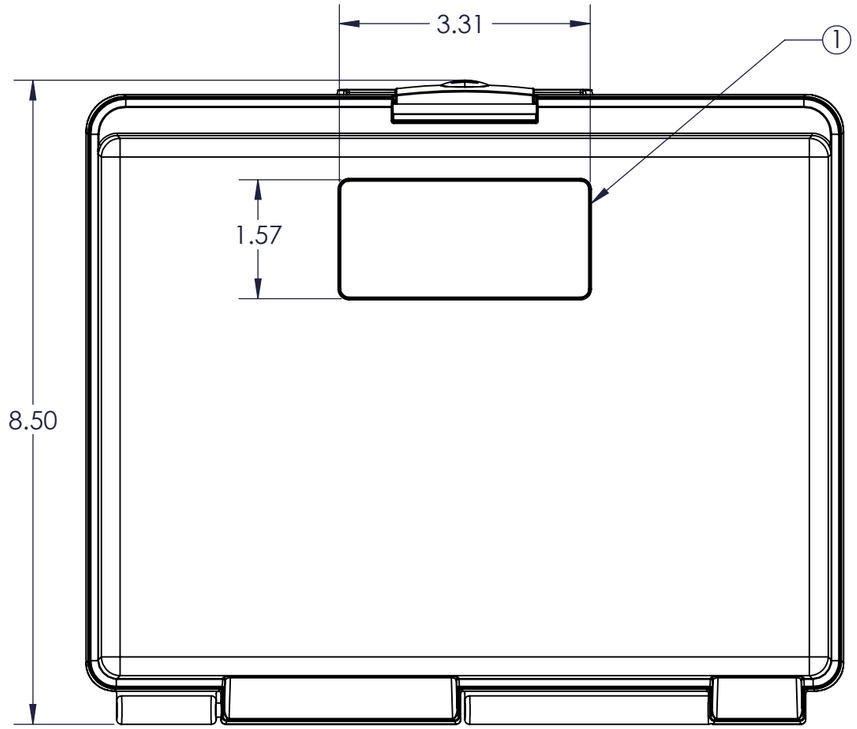

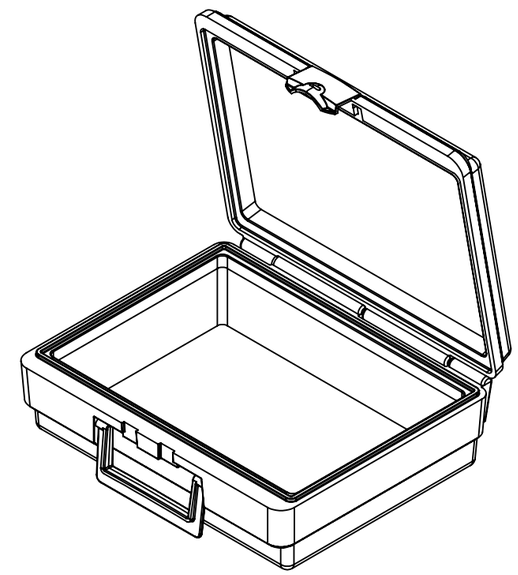

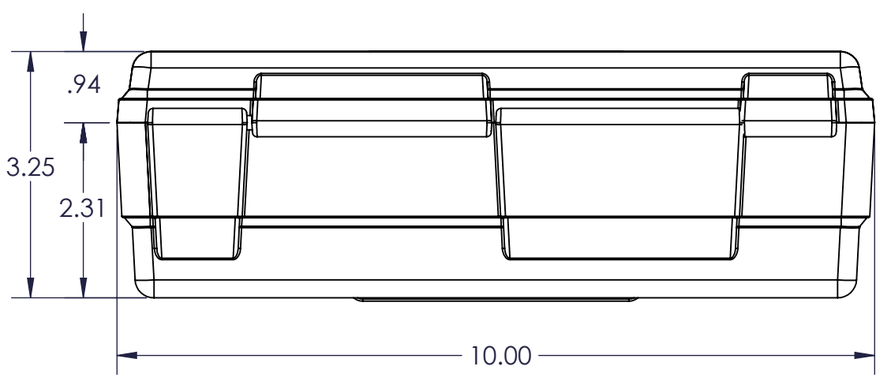

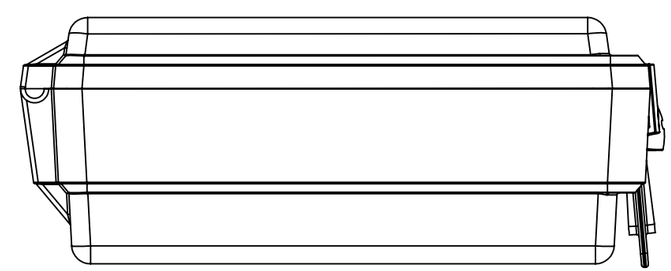

Notes
1. Depth of logo area: 0.085"

REV	ECR	DESCRIPTION	DATE	BY	APR

REVISIONS

PROPRIETARY AND CONFIDENTIAL
THE INFORMATION CONTAINED IN THIS DRAWING IS THE SOLE PROPERTY OF FLAMBEAU, INC. ANY REPRODUCTION IN PART OR AS A WHOLE WITHOUT THE WRITTEN PERMISSION OF FLAMBEAU, INC. IS PROHIBITED.

DIMENSIONS ARE IN INCHES
TOLERANCES:
FRACTIONAL ±1/64"
ANGULAR: MACH ± .5 BEND ±
TWO PLACE DECIMAL ±.040"
THREE PLACE DECIMAL ±.005"
FOUR PLACE DECIMAL ±.001"

SHT 1 OF 1

FLAMBEAU, INC.
911 LYNN AVENUE BARABOO, WI 53913 PH.(608)356-5551

Scale: 1:2	BFI No: NA	Drawn By: RES Date: 1-5-18
Mold No: NA	Mat'l:	FPN: TBD

Description:
PH-3.125 BACK, TOP, RIGHT

Customer: **Flambeau Packaging**

Dwg No: **50048-TE**

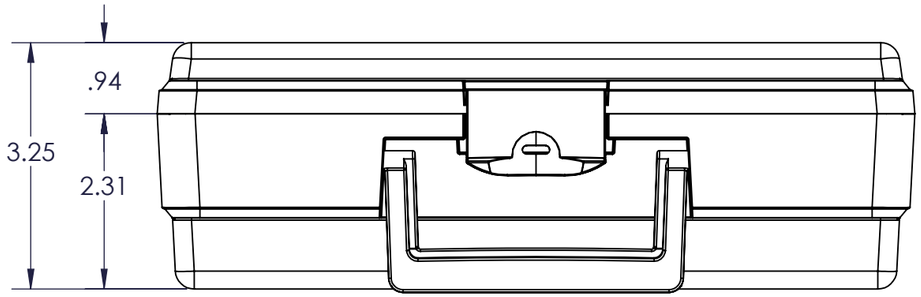

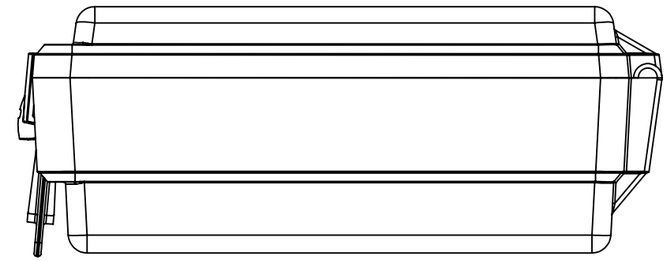

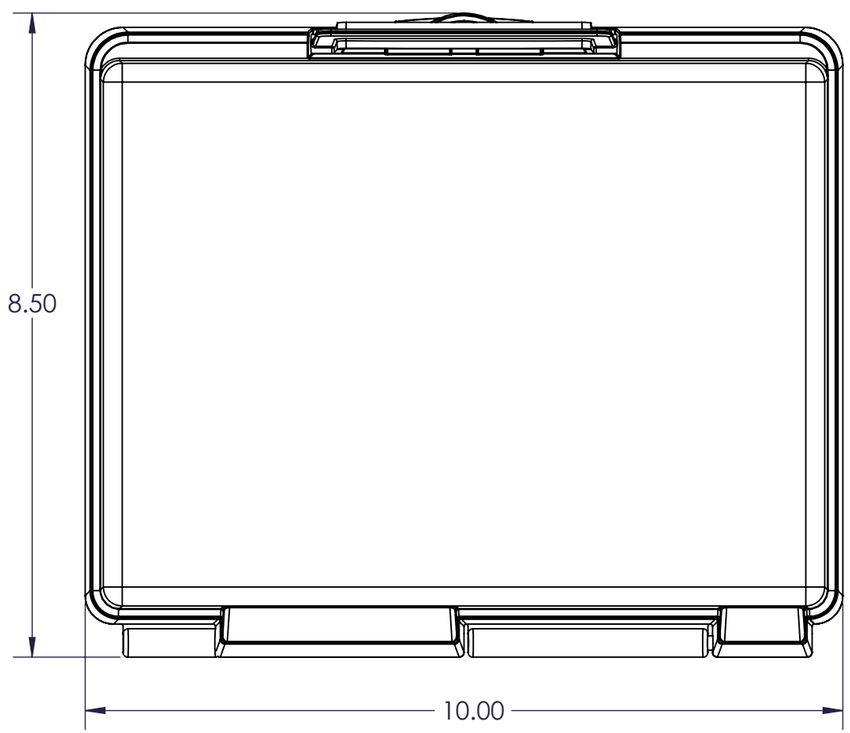

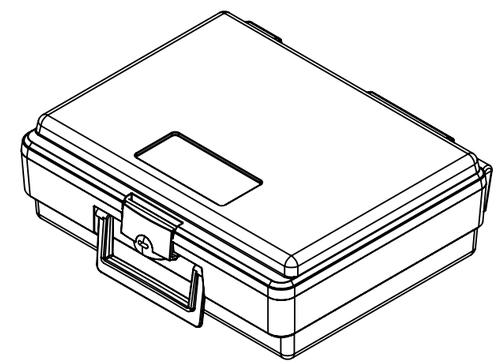

REV	ECR	DESCRIPTION	DATE	BY	APR

REVISIONS

PROPRIETARY AND CONFIDENTIAL
THE INFORMATION CONTAINED IN THIS DRAWING IS THE SOLE PROPERTY OF FLAMBEAU, INC. ANY REPRODUCTION IN PART OR AS A WHOLE WITHOUT THE WRITTEN PERMISSION OF FLAMBEAU, INC. IS PROHIBITED.

DIMENSIONS ARE IN INCHES
TOLERANCES:
FRACTIONAL ±1/64"
ANGULAR: MACH ± .5 BEND ±
TWO PLACE DECIMAL ±.040"
THREE PLACE DECIMAL ±.005"
FOUR PLACE DECIMAL ±.001"

SHT 1 OF 1

FLAMBEAU, INC.
911 LYNN AVENUE BARABOO, WI 53913 PH.(608)356-5551

Scale: 1:2 | BFI No: NA | Drawn By: RES Date: 1-5-18
Mold No: NA | Mat'l: | FPN: **TBD**

Description:
PH-3.125 FRONT BOTTOM LEFT

Customer: **Flambeau Packaging**

Dwg No: **50048-BE**

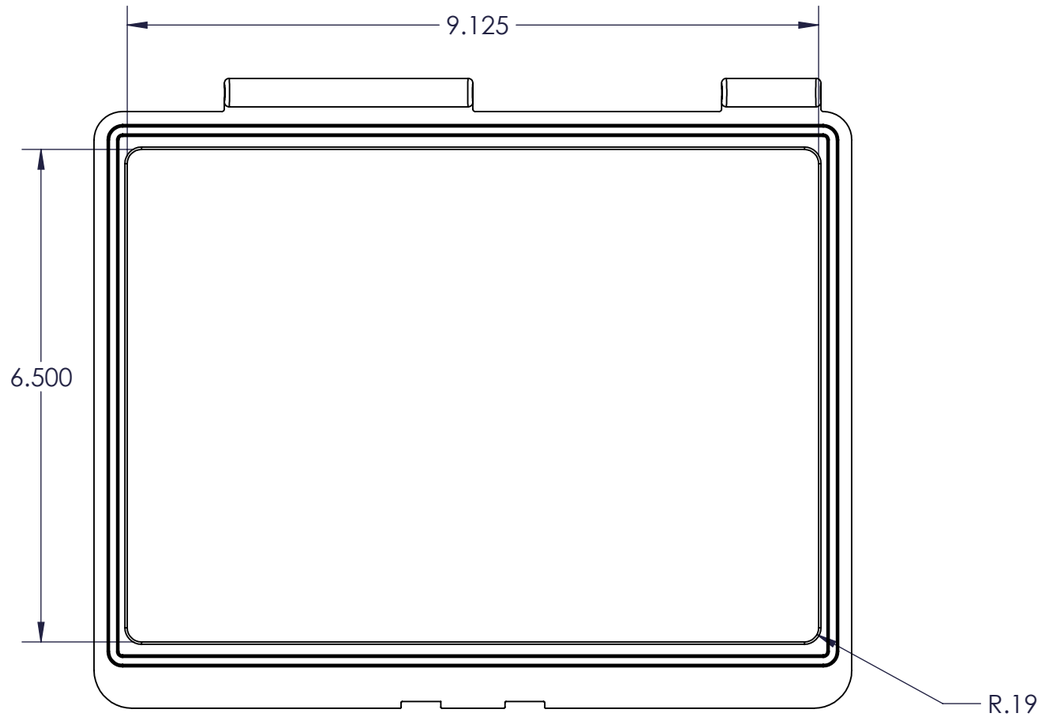

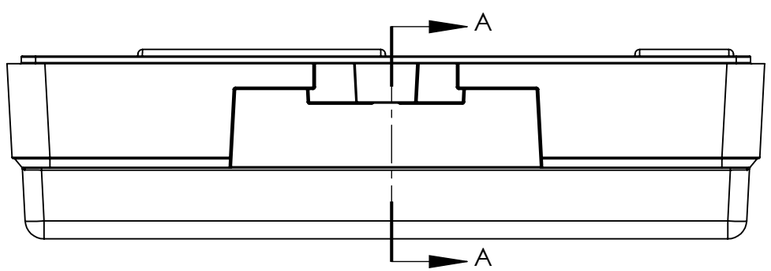

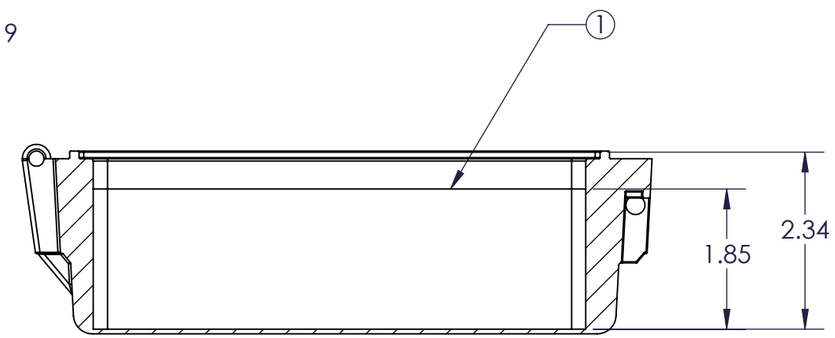

SECTION A-A

Notes
1. Minimum foam height
2. Drawing represents usable storage space for the base interior.
3. Flambeau recommends requesting a sample box before designing any fitted dunnage solutions such as foam interiors.

REV	ECR	DESCRIPTION	DATE	BY	APR

REVISIONS

PROPRIETARY AND CONFIDENTIAL
THE INFORMATION CONTAINED IN THIS DRAWING IS THE SOLE PROPERTY OF FLAMBEAU, INC. ANY REPRODUCTION IN PART OR AS A WHOLE WITHOUT THE WRITTEN PERMISSION OF FLAMBEAU, INC. IS PROHIBITED.

DIMENSIONS ARE IN INCHES
TOLERANCES:
FRACTIONAL ± 1/64"
ANGULAR: MACH ± .5 BEND ±
TWO PLACE DECIMAL ±.040"
THREE PLACE DECIMAL ±.005"
FOUR PLACE DECIMAL ±.001"

SHT 1 OF 1

FLAMBEAU, INC.
911 LYNN AVENUE BARABOO, WI 53913 PH.(608)356-5551

Scale: 1:2	BFI No: NA	Drawn By: RES Date: 1-5-18
Mold No: NA	Mat'l:	FPN: TBD

Description:
PH-3.125 BASE INTERIOR

Customer: **Flambeau Packaging**

Dwg No: **50048-BI**

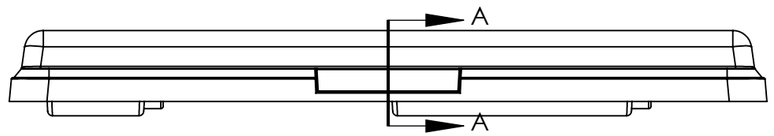

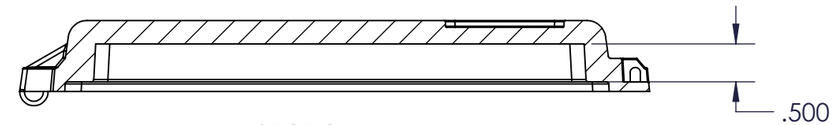

SECTION A-A

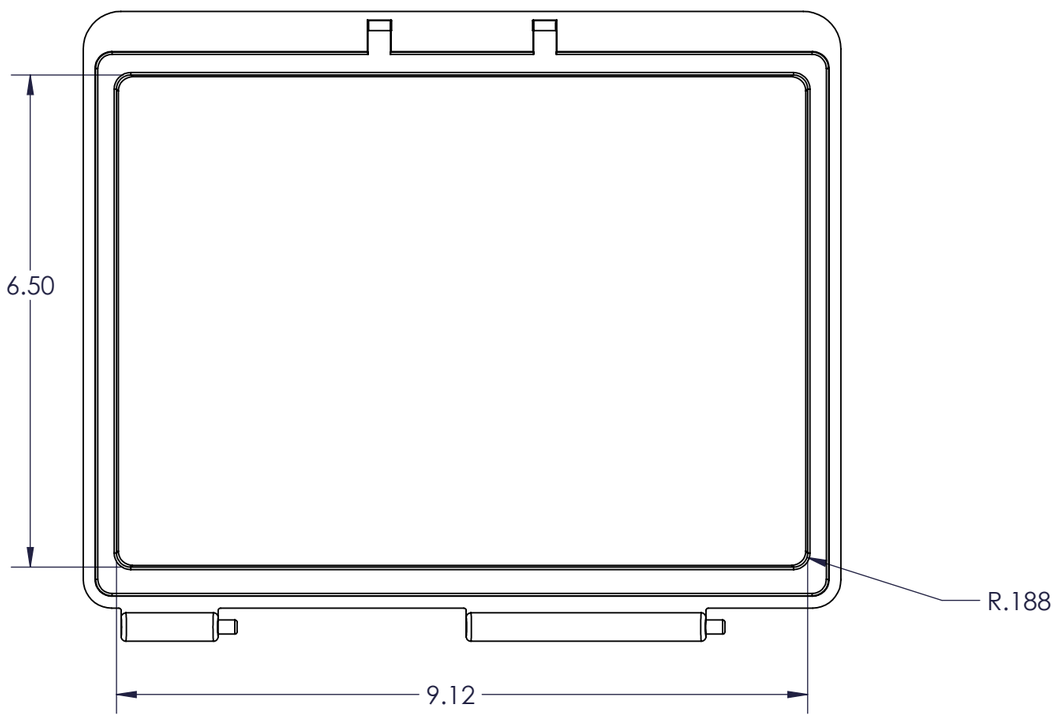

REV	ECR	DESCRIPTION	DATE	BY	APR

REVISIONS

PROPRIETARY AND CONFIDENTIAL
THE INFORMATION CONTAINED IN THIS DRAWING IS THE SOLE PROPERTY OF FLAMBEAU, INC. ANY REPRODUCTION IN PART OR AS A WHOLE WITHOUT THE WRITTEN PERMISSION OF FLAMBEAU, INC. IS PROHIBITED.

DIMENSIONS ARE IN INCHES
TOLERANCES:
FRACTIONAL ±1/64"
ANGULAR: MACH ± .5 BEND ±
TWO PLACE DECIMAL ±.040"
THREE PLACE DECIMAL ±.005"
FOUR PLACE DECIMAL ±.001"

SHT 1 OF 1

FLAMBEAU, INC.
911 LYNN AVENUE BARABOO, WI 53913 PH.(608)356-5551

Scale: 1:2	BFI No: NA	Drawn By: RES Date: 1-5-18
Mold No: NA	Mat'l:	FPN: **TBD**

Description:
PH-3.125 LID INTERIOR

Customer: **Flambeau Packaging**

Dwg No: **50045-LI**